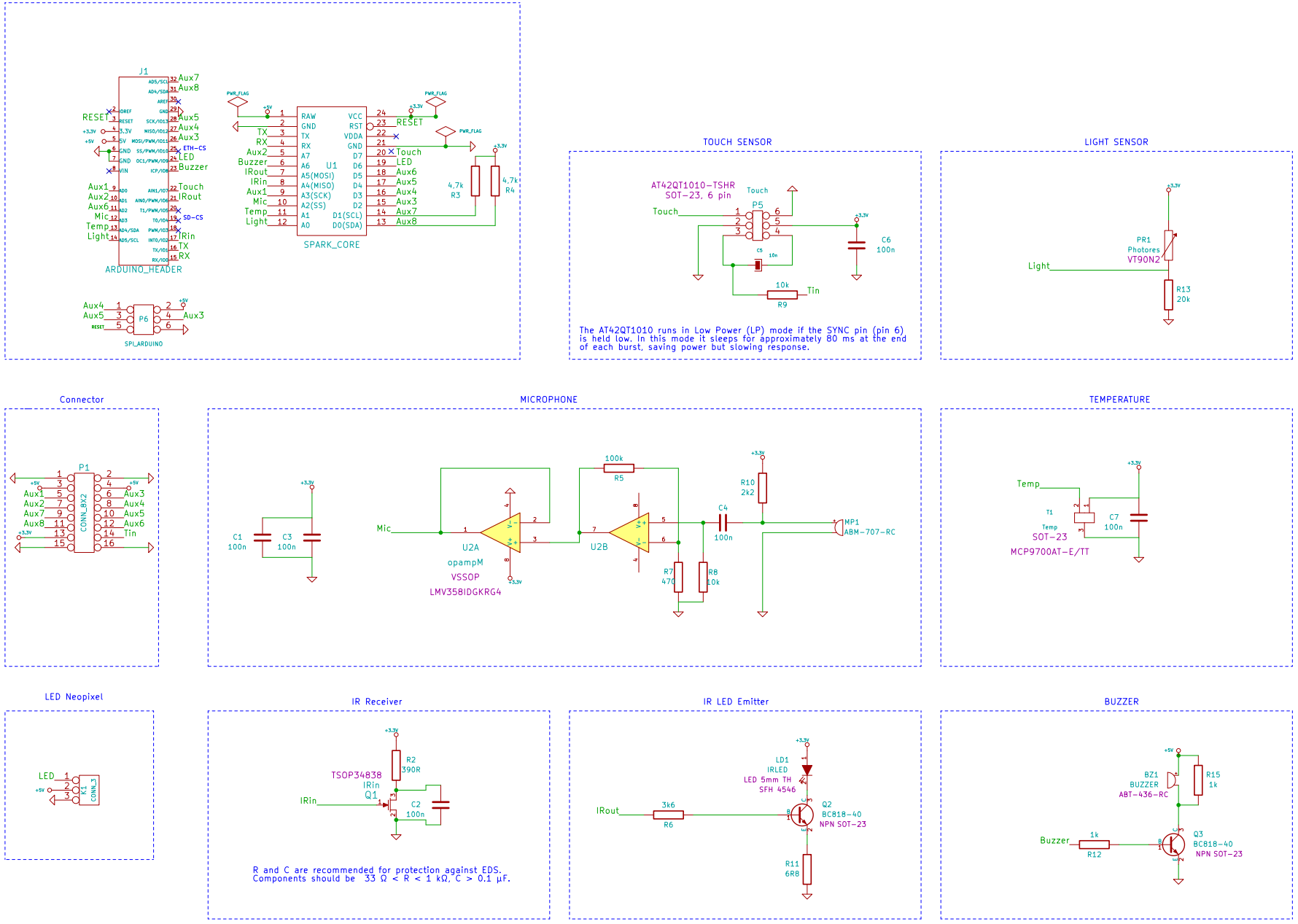

SMARTIFY YOUR WORLD		
TOI – ThingsOnInternet.biz		
File: TOI_Shield.sch		
Sheet: /		
Title: TOI Shield – v1.0		
Size: A3	*Date: 14 jul 2015*	*Rev: A*
KiCad E.D.A.		Id: 1/1